INCH-POUND

MIL-DTL-8954C
24 October 2006
SUPERSEDING
MIL-B-8954B
17 September 1970

DETAIL SPECIFICATION

BASE AND ACCESSORIES, AIRPORT MARKER LIGHTS, GENERAL SPECIFICATION FOR

Inactive for new design after 24 October 2006

This specification is approved for use by all Departments and Agencies of the Department of Defense.

1. SCOPE

1.1 This specification covers the general requirements for bases, base plate assemblies, adapter plates, covers, frangible couplings, cable clamps, and gaskets used to install airport semiflush and elevated lights.

2. APPLICABLE DOCUMENTS

2.1 General. The documents listed in this section are specified in section 3, 4, or 5 of this standard. This section does not include documents cited in other sections of this standard or recommended for additional information or as examples. While every effort has been made to ensure the completeness of this list, document users are cautioned that they must meet all specified requirements of documents cited in sections 3, 4, or 5 of this standard, whether or not they are listed.

Comments, suggestions, or questions on this document should be addressed to: Defense Supply Center Philadelphia, ATTN: DSCP-NASA, 700 Robbins Ave, Philadelphia, PA 19111-5096 or emailed to dscpg&ispeccomments@dla.mil. Since contact information can change, you may want to verify the currency of this address information using the ASSIST Online database at http://assist.daps.dla.mil/

AMSC N/A FSC 6210

2.2 Government documents.

2.2.1 Specifications, standards, and handbooks. The following specifications, standards, and handbooks form a part of this document to the extent specified herein. Unless otherwise specified, the issues of these documents are those cited in the solicitation or contract.

DEPARTMENT OF DEFENSE SPECIFICATIONS

MS17814	Coupling, Frangible, Aviation Ground Lights
MS17815	Clamp, Cable, Aviation Ground Lights
MS21205	Seal, Cover Bolt, Compression Type
MS24345	Base Plate Assembly, Runway Marker Lamp
MS24526	Base, Airport Marker Light
MS26577	Gasket, Airport Marker Light Base
MS26580	Cover, Airport Marker Light Base, Blank

DEPARTMENT OF DEFENSE STANDARDS

MIL-STD-889 Dissimilar Metals

DEPARTMENT OF DEFENSE HANDBOOKS

MIL-HDBK-831 Preparation of Test Reports

(Copies of these documents are available online at http://assist.daps.dla.mil/quicksearch/ or from the Standardization Document Order Desk, 700 Robbins Avenue, Building 4D, Philadelphia, PA 19111-5094.)

2.3 Non-Government publications. The following documents form a part of this specification to the extent specified herein. Unless otherwise specified, these documents are those cited in the solicitation or contract.

AMERICAN SOCIETY FOR TESTING AND MATERIALS STANDARD (ASTM)

ASTM A153/A153M Standard Specification for Zinc Coating (Hot-Dip) on Iron and Steel Hardware

(Copies of these documents are available from http://www.astm.org or ASTM, 100 Barr Harbor Drive, West Conshohocken, PA 19428-2959.)

2.4 Order of precedence. In the event of a conflict between the text of this document and the reference cited herein, the text of this document takes precedence. Nothing in this document, however, supersedes applicable laws and regulations unless a specific exemption has been obtained.

3. REQUIREMENTS

3.1 Qualification. The articles furnished under this specification shall be products which are qualified for listing on the applicable qualified products list at the time set for opening of bids (see 4.2 and 6.3).

3.2 Materials.

3.2.1 Metals. The metals shall be as specified herein and on the Military Standard (MS) as applicable. Unless otherwise specified, metals shall be of the corrosion-resistant type or treated to resist corrosion. Dissimilar metals, when used, shall be in accordance with MIL-STD-889.

3.3 Design and construction. The design construction shall be in accordance with the applicable MS.

3.3.1 Bases (with flanged hubs). The bases shall be in accordance with MS24526. The cylinder, including sides and bottom, shall be fabricated of sheet steel. All seams shall be externally welded and watertight. The top flange shall be steel plate. After complete fabrication and galvanizing, the top surface of the flange shall lie entirely between two planes that are perpendicular to the light base axis and separated by .030 inch. The side wall of the base shall lie entirely within two concentric right circular cylinders parallel to the light base axis spaced .3 inch apart.

3.3.1.1 Base finish. After fabrication, the base shall be corrosion protected by hot-dip galvanizing in accordance with ASTM A153/A153M. Immediately after plating, the gasket surface (opposite end from flanges) shall be wiped smooth, suitable for a proper sealing surface.

3.3.1.2 Flange hubs. Two 2-inch steel tank flanges, or equivalent, shall be welded to the cylinder 180º ±1º apart, random location in relation to bolt holes in top flange, and shall not deviate more than 1º from the perpendicular to the base axis. Flange welds shall be continuous and external. Projection beyond the body of the base shall not exceed 2.5 inches. Threads shall be protected with an antiseize and anticorrosive compound.

3.3.2 Base plate assembly. The base plate assembly shall be in accordance with MS24345. Ferrous materials shall be used. After fabrication, hot-dip galvanizing shall be applied in accordance with ASTM A153/A153M. Immediately after plating, the gasket surface shall be wiped smooth, suitable for a proper sealing surface.

3.3.3 Blank cover. Blank base covers used shall be in accordance with MS26580. After fabrication, hot-dip galvanizing shall applied in accordance with ASTM A153/A153M. Immediately after plating, the gasket surface shall be wiped smooth, suitable for a proper sealing surface.

3.3.4 Gaskets and seal. Unless otherwise specified, all gaskets and seals shall be made of material as designated on the applicable MS.

3.3.4.1 Airport marker light base gasket. Marker light base gaskets shall be in accordance with MS26577. One gasket shall be packaged with each base plate assembly, adapter plate, or blank cover. Gaskets shall not be furnished with the bases.

3.3.5 Frangible coupling. Frangible couplings used with base plate assemblies shall be in accordance with MS17814.

3.3.6 Cable clamp. Cable clamps shall be in accordance with MS17815.

3.3.7 Washer seal. Six seal washers in accordance with MS21205 shall be supplied with each base plate assembly and blank cover.

3.3.8 Connector retainer. One steel connector retainer in accordance with MS24345 shall be supplied with each base plate assembly.

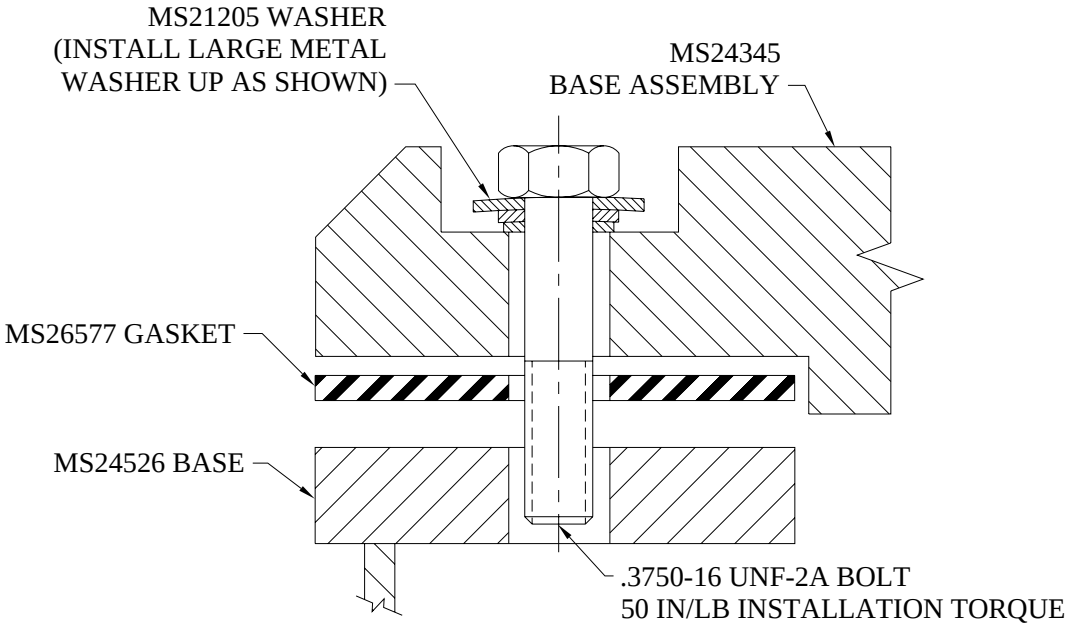

BOLT MOUNTING

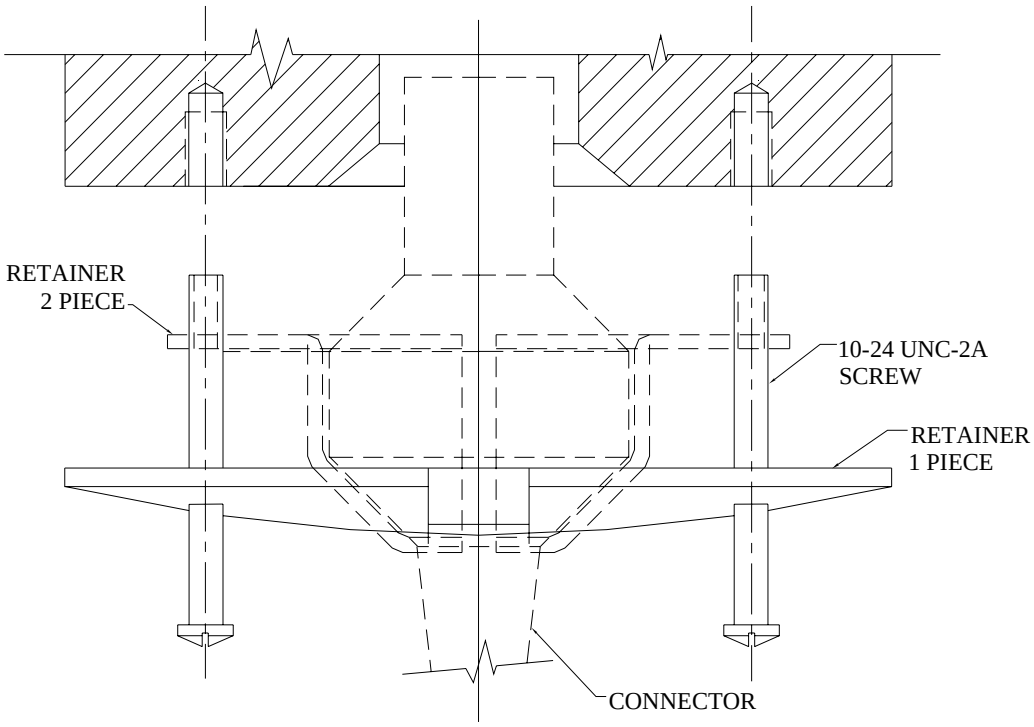

RETAINER MOUNTING

FIGURE 1. Mounting detail instructions

3.3.9 Instructions. Instructions for the installation and bolt torque requirements shall be included with the base plate assembly and blank cover. Bolt torque shall be listed at 50 ±5 inch-pounds (see figure 1).

3.4 Performance.

3.4.1 Base leakage. When tested as specified in 4.4.2, there shall be no indication of leakage.

3.4.2 Design load. The base plate assembly and blank cover shall withstand a static load of 100,000 pounds due to an aircraft wheel or load being applied to it. There shall be no breakage or cracking of the base plate assembly or cover, nor deformation of steel plates that could cause leakage when tested as specified in 4.4.4.

3.5 Part numbering of interchangeable parts. All parts having the same manufacturer's part number shall be functionally and dimensionally interchangeable.

3.6 Dimensions. All articles shall meet the dimensional requirements of the applicable MS.

3.7 Identification of product. Markings of all articles shall include the MS part number, the manufacturer's name, abbreviation, trademark, and manufacturer's identification number. All identification shall be legible after galvanizing.

3.8 Workmanship. All components shall be fabricated and finished in a thoroughly workmanship manner. Particular attention shall be given to freedom from blemishes and defects, marking, thoroughness of welding, galvanizing, and alignment of components.

3.8.1 Cleaning. All components shall be thoroughly cleaned, and loose, spattered or excess welding, metal chips, and other foreign material removed during or after final assembly. Weld scale shall be removed before galvanizing.

4. VERIFICATION

4.1 Classifications of inspections. The inspection requirements specified herein are classified as follows:

a. Qualification inspection (see 4.2).
b. Conformance inspection (see 4.3).

4.2 Qualification inspection.

4.2.1 Test samples. The test samples shall consist of one component of each manufacturer's part number upon which qualification is desired. Reports of tests performed on the samples shall be forwarded to the activity responsible for qualification (see 6.3).

4.2.2 Test report. Upon completion of the qualification testing, a test report will be prepared in accordance with the guidance of MIL-HDBK-831.

4.2.3 Qualification tests. Qualification tests shall consist of all tests described under 4.4.

4.3 Conformance inspection. Conformance inspection shall consist of the following:

a. Individual test
b. Sampling tests

4.3.1 Individual test. Each component shall be subjected to an examination of product test as described under 4.4.

4.3.2 Sampling tests.

4.3.2.1 Sampling. One component shall be selected at random from each lot of 100 or fraction thereof produced and subjected to the following tests as described under 4.4.

a. Base leakage
b. Dimensions
c. Static load

4.3.2.1.1 Lot. A lot shall consist of components manufactured under essentially the same conditions and submitted for tests at substantially the same time.

4.4 Test methods.

4.4.1 Examination of product. Each component shall be examined to determine conformance to this specification with respect to materials, workmanship, and marking.

4.4.2 Base leakage. All holes in the base except those required to accommodate the pressure gage and air inlet shall be sealed. A blank cover conforming to MS26580 and matching gasket conforming to MS26577 shall be bolted to the top flange of the base. Suitable fitting with a pressure gage shall be connected to the base. Air pressure of 15 ±2 psi shall be applied to the assembly for 10 minutes. A high-foam detergent producing a low-surface tension shall be applied to all surfaces, including welds and joints. Any leakage indicated by bubbles shall be cause for rejection.

4.4.3 Dimensions. Articles selected as specified in 4.3.2.1 shall be checked for compliance with the dimensions of the applicable MS.

4.4.4 Static load. The base plate assembly or blank cover, as applicable, shall be mounted on a rectangular cross-sectioned ring having an inside diameter of 8 inches and an outside diameter of not less than 12 inches. The ring shall be not less than 2 inches thick. Six equally spaced holes matching those provided on the top mounting surface of the MS24526-4 base shall be provided in the ring. The holes shall be of sufficient depth to accommodate .3750-16 UNC-2A bolts when the base plate assembly or blank cover is mounted on the ring for test. A gasket conforming to MS26577-1 shall be installed between the base plate assembly or blank cover as applicable, and the mounting surface of the test ring. Mounting bolts shall than be installed and drawn down as if the item was being installed on an MS24526-4 base. A load of 100,000 pounds shall be applied at a rate of approximately 20,000 pounds per minute to the top of the test item through a rubber or synthetic rubber block with a Shore A hardness of 60 +5. The block shall be 1-1/2 inches thick and at least 12 inches in diameter and centered on the test item. The rubber block shall be covered by a metal plate of sufficient thickness that it will not be physically deformed during the test. The plate shall be at least 12 inches in diameter and shall be centered on the ring and item being tested. Failure as evidenced by cracking or breaking of the test item before the applied load reaches 100,000 pounds shall be cause for rejection without further testing. Otherwise, the base plate assembly or blank cover, as applicable, shall be subjected to the leakage test in 4.4.2. A new gasket shall be installed between the test item and base, and all open holes in the base plate cover shall be sealed when the leakage test is conducted. Any leakage as indicated by bubbles between the base plate assembly or blank cover and the base shall be cause for rejection of the test item.

5 PACKAGING

5.1 Packaging. For acquisition purposes, the packaging requirements shall be as specified in the contract or order (see 6.2). When packaging of material is to be performed by DoD or in-house contractor personnel, these personnel need to contact the responsible packaging activity to ascertain packaging requirements. Packaging requirements are maintained by the Inventory Control Point's packaging activities within the Military Service or Defense Agency, or within the military service's system commands. Packaging data retrieval is available from the managing Military Department's or Defense Agency's automated packaging files, CD-ROM products, or by contacting the responsible packaging activity.

6. NOTES

(This section contains information of a general or explanatory nature that may be helpful, but is not mandatory.)

6.1 Intended use. The base and accessories covered by this specification are intended for use in the installation of airport marker lights.

6.2 Acquisition requirements. Acquisition documents should specify the following:

a. Title, number, and date of this specification.

b. MS part number (see 3.3)

c. Packaging requirements (see 5.1)

6.3 Qualification. With respect to products requiring qualification, awards will be made only for products which are at the time set for opening of bids, qualified for inclusion in the applicable Qualified Products List whether or not such products have actually been so listed by that date. The attention of the suppliers is called to this requirement, and manufacturers are urged to arrange to have the products that they propose to offer to the Federal Government tested for qualification in order that they may be eligible to be awarded contracts or orders for the products covered by this specification.

6.4 Reclaimed materials. The use of reclaimed materials should be encouraged to the maximum extent possible.

6.5 Subject term (key word) listing.

Aviation ground light
Cover marker light
Gasket marker light

6.6 Changes from previous issue. Marginal notations are not used in this revision to identify changes with respect to the previous issue due to the extent of the changes.

Custodians:
Navy – AS
Air Force – 99

Preparing activity:
DLA – IS

(Project 6210-2006-020)

NOTE: The activities listed above were interested in this document as of the date of this document. Since organizations and responsibilities can change, you should verify the currency of the information above using the ASSIST Online database at http://assist.daps.dla.mil/.